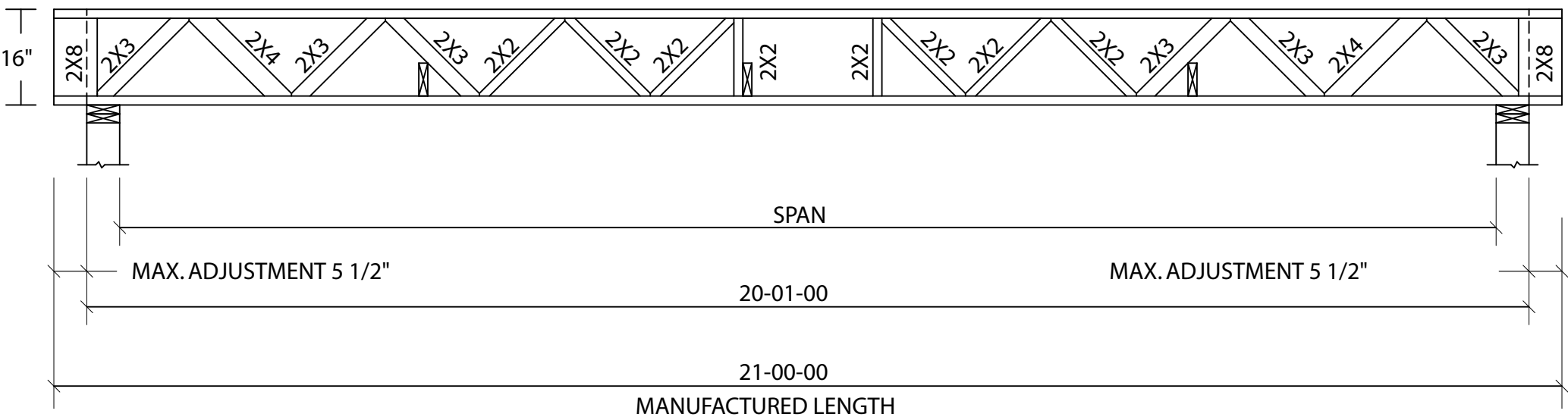
16"
2X8
2X3
2X4
2X3
2X3
2X2
2X2
2X2
2X2
2X2
2X2
2X2
2X2
2X3
2X3
2X4
2X3
2X8
SPAN
MAX. ADJUSTMENT 5 1/2"
MAX. ADJUSTMENT 5 1/2"
20-01-00
21-00-00
MANUFACTURED LENGTH